BSW 2123 C
BSW 2123 120/USA
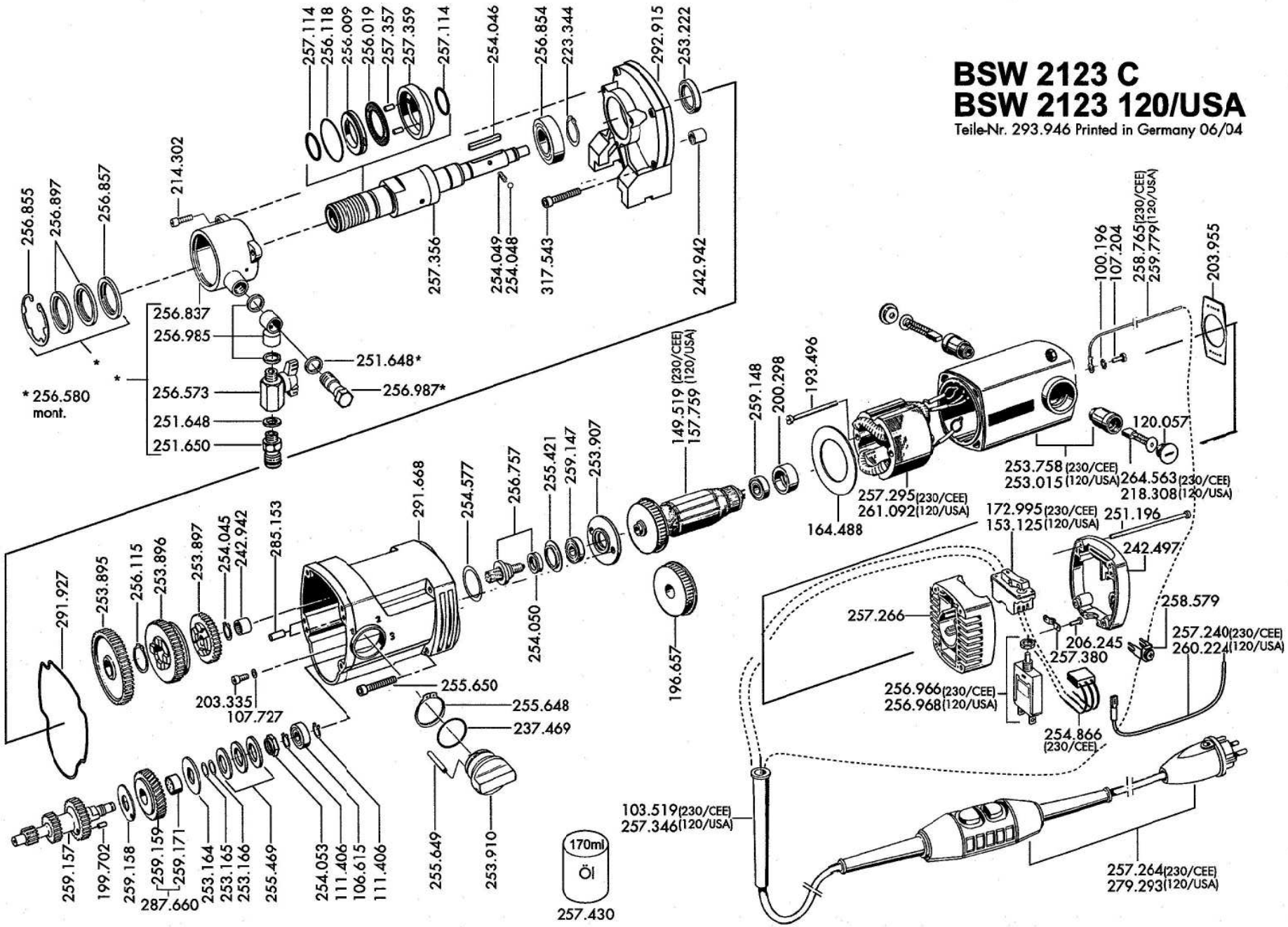
Teile-Nr. 293.946 Printed in Germany 06/04